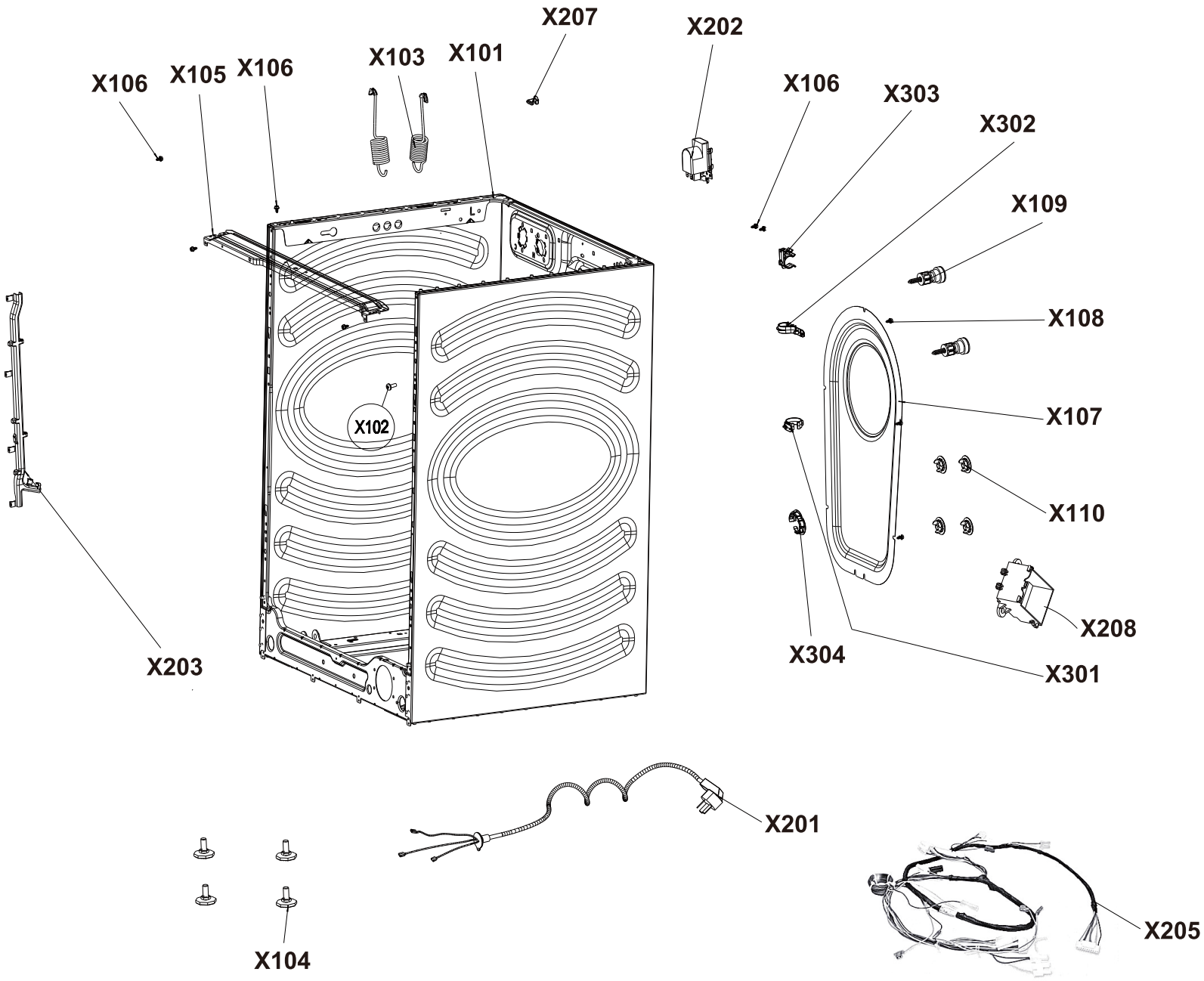
X207
X202
X106
X105
X106
X103
X101
X106
X303
X302
X109
X108
X107
X110
X208
X304
X301
X102
X203
X201
X104
X205

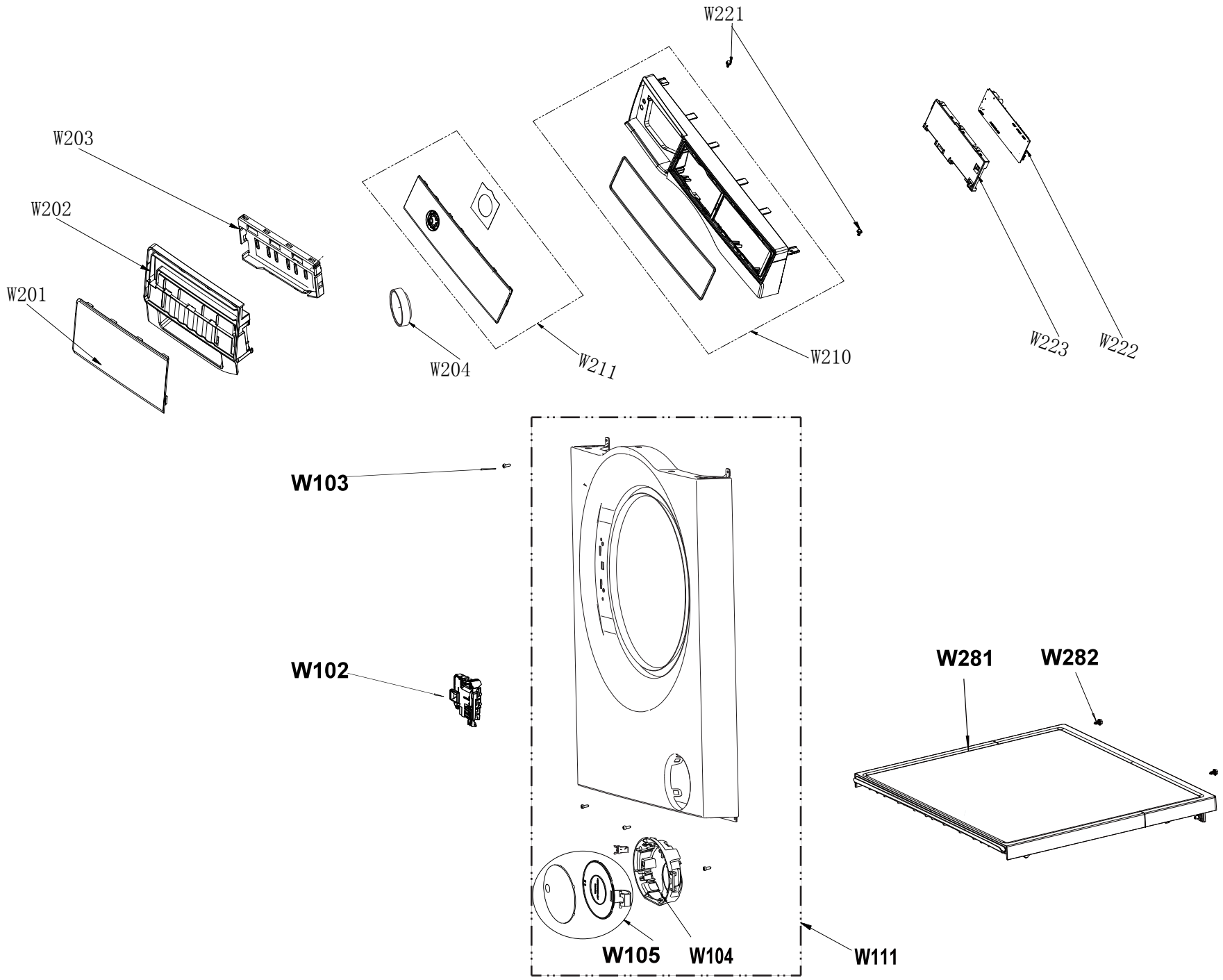
W221
W203
W202
W201
W204
W211
W210
W223
W222
W103
W102
W281
W282
W105
W104
W111

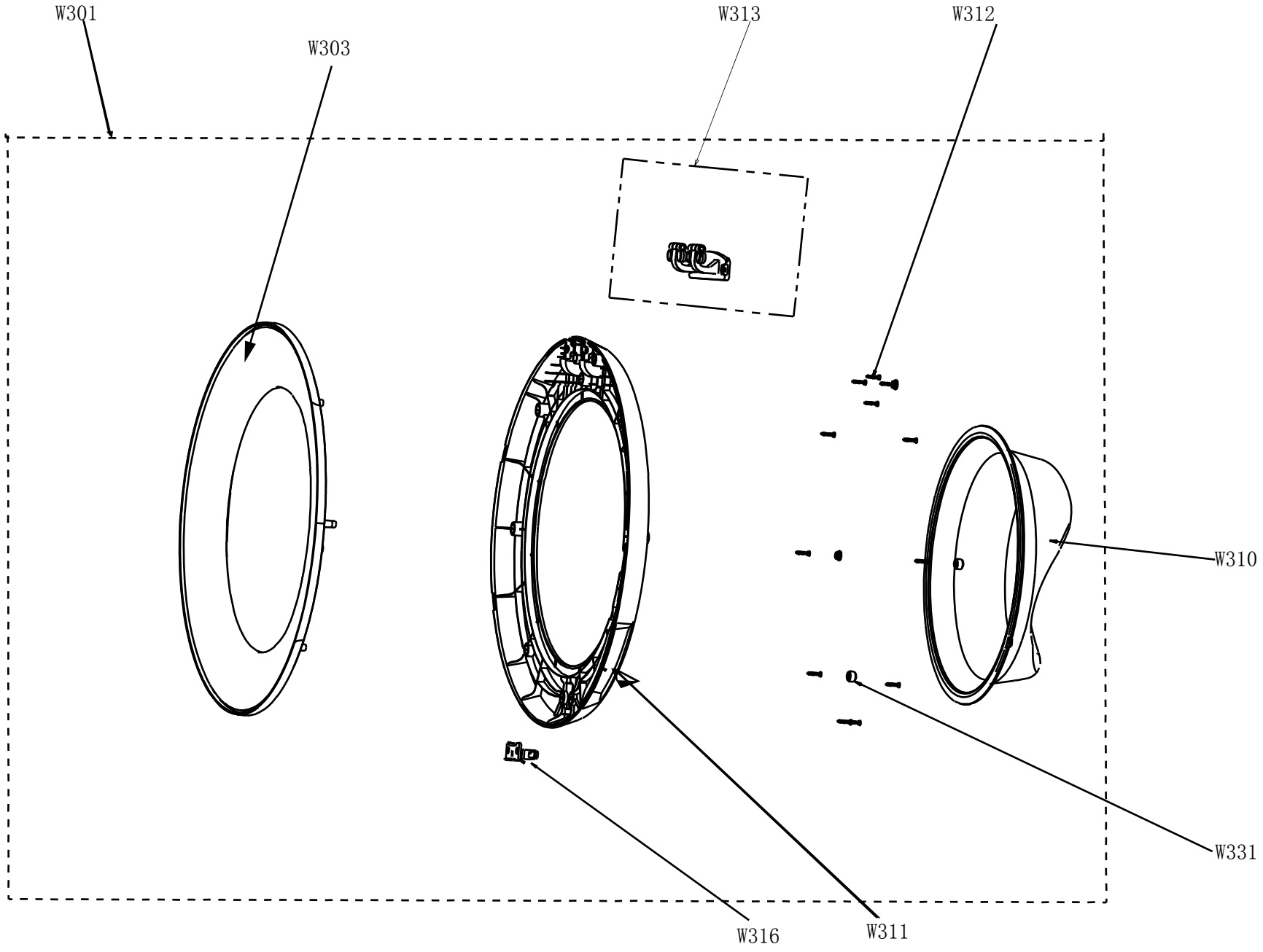
W301
W303
W313
W312
W310
W331
W316
W311

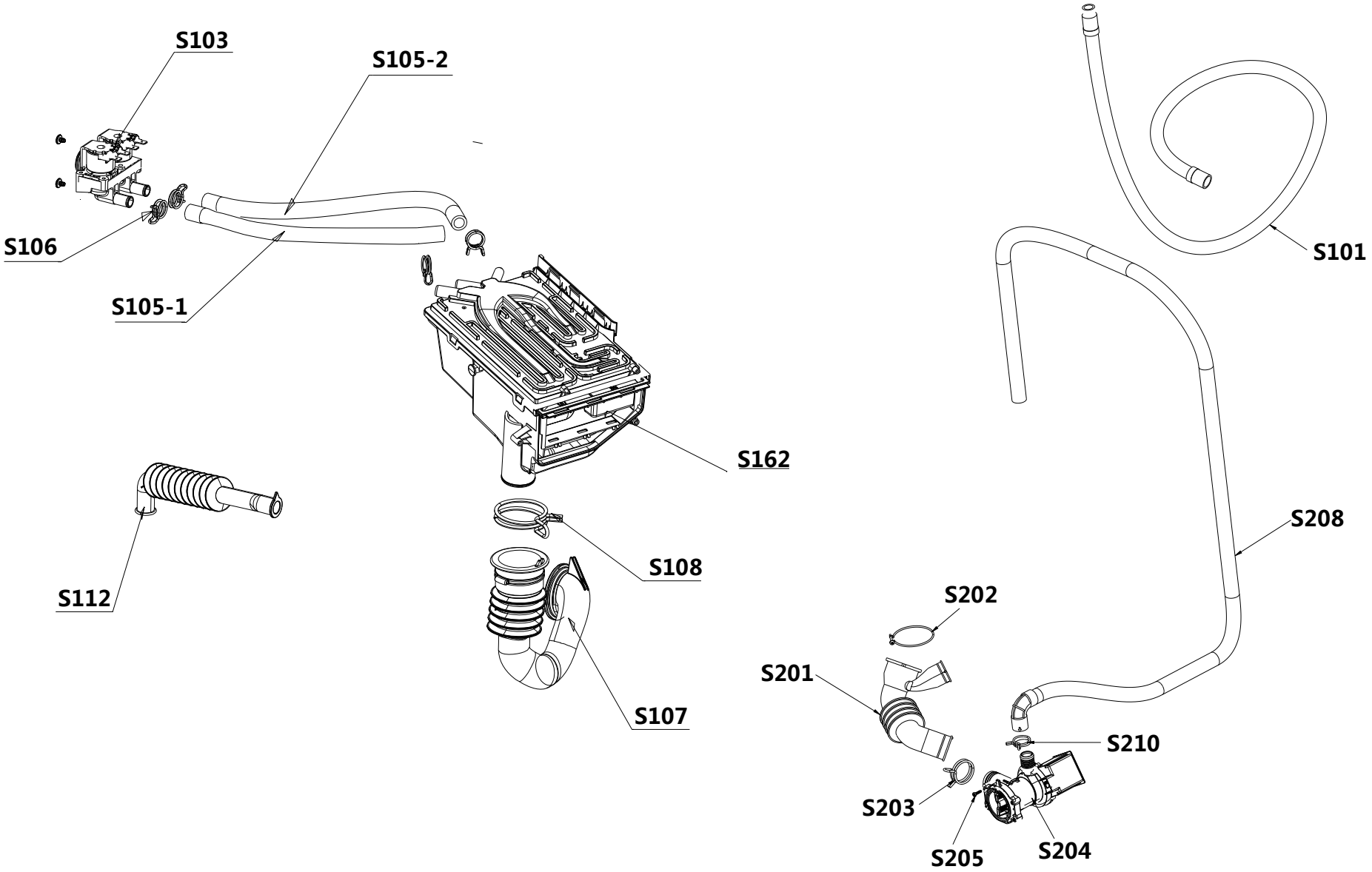
S103
S105-2
S106
S105-1
S162
S112
S108
S107
S101
S208
S202
S201
S210
S203
S205
S204

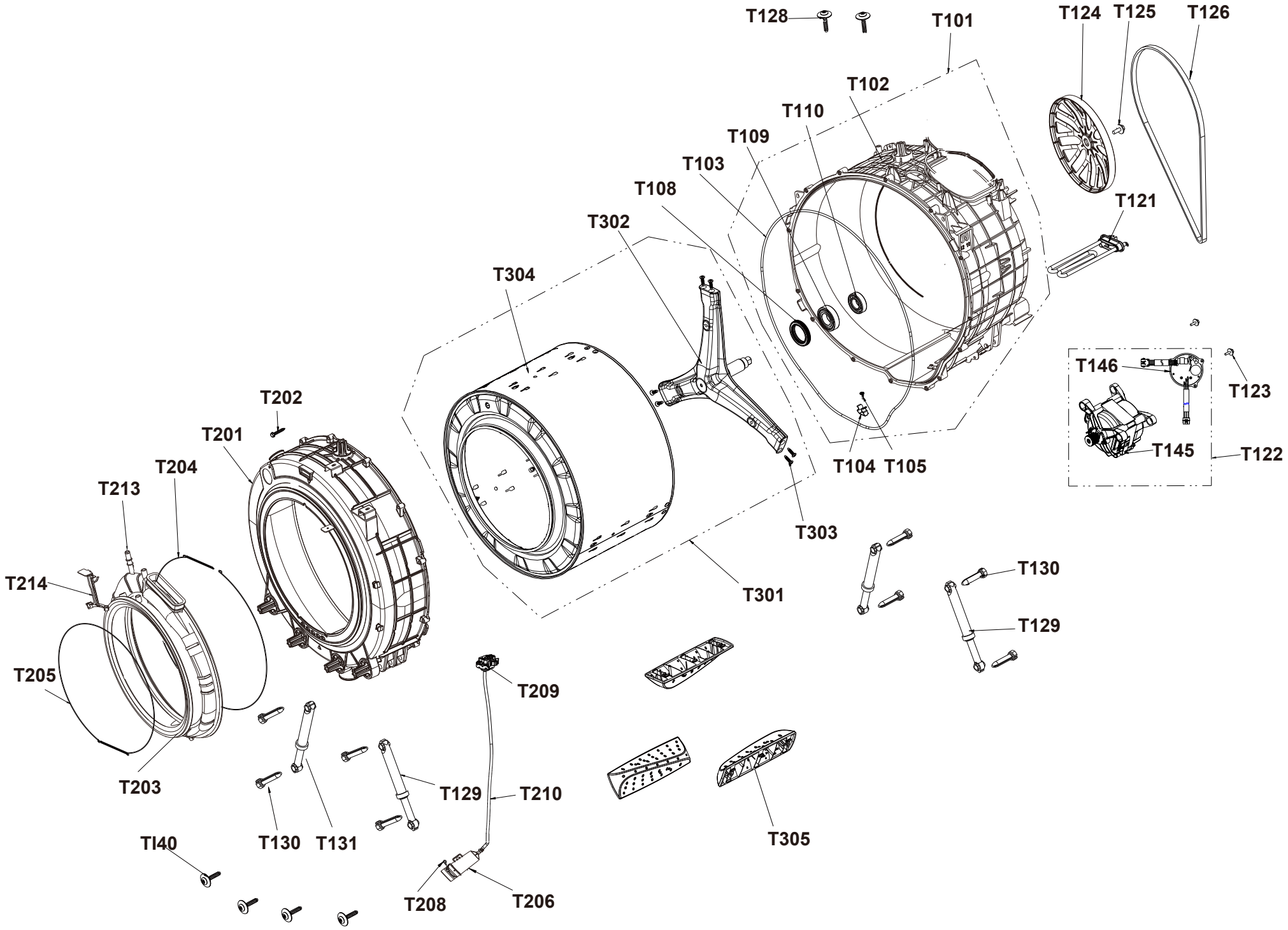
T128
T101
T124
T125
T126
T102
T110
T109
T103
T108
T121
T302
T304
T146
T123
T145
T122
T104
T105
T202
T201
T204
T213
T303
T214
T301
T130
T129
T205
T209
T203
T129
T210
T130
T131
T305
TI40
T208
T206